NOZZLE DESIGNATIONS		
ITEM	DESCRIPTION	SIZE
A	INLET	1 1/2" - 150# RF
B	OUTLET	1 1/2" - 150# RF
C	DRAIN	3/4" - NPT

TOTAL WEIGHT: 254 LBS.

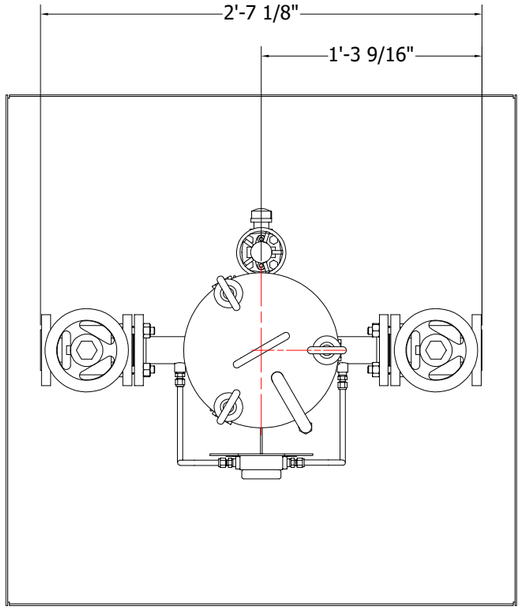

PLAN VIEW
SCALE NTS

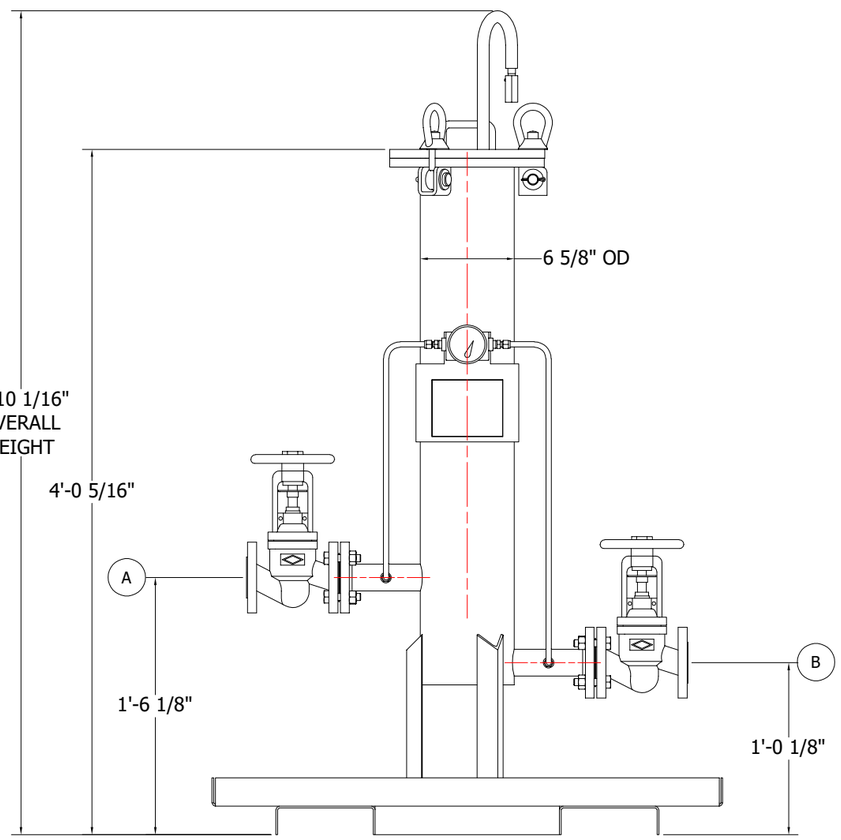

ELEVATION VIEW - FRONT
SCALE NTS

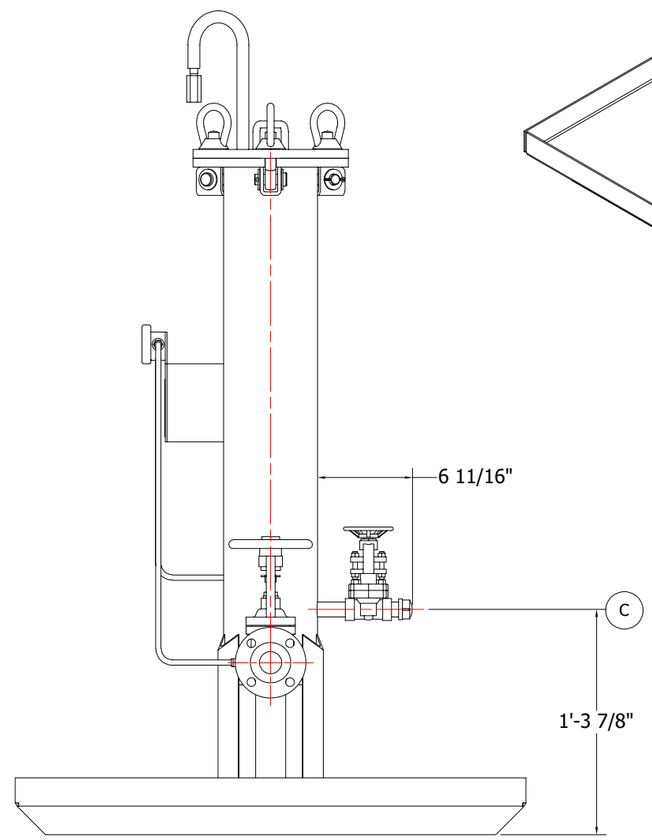

ELEVATION VIEW - SIDE
SCALE NTS

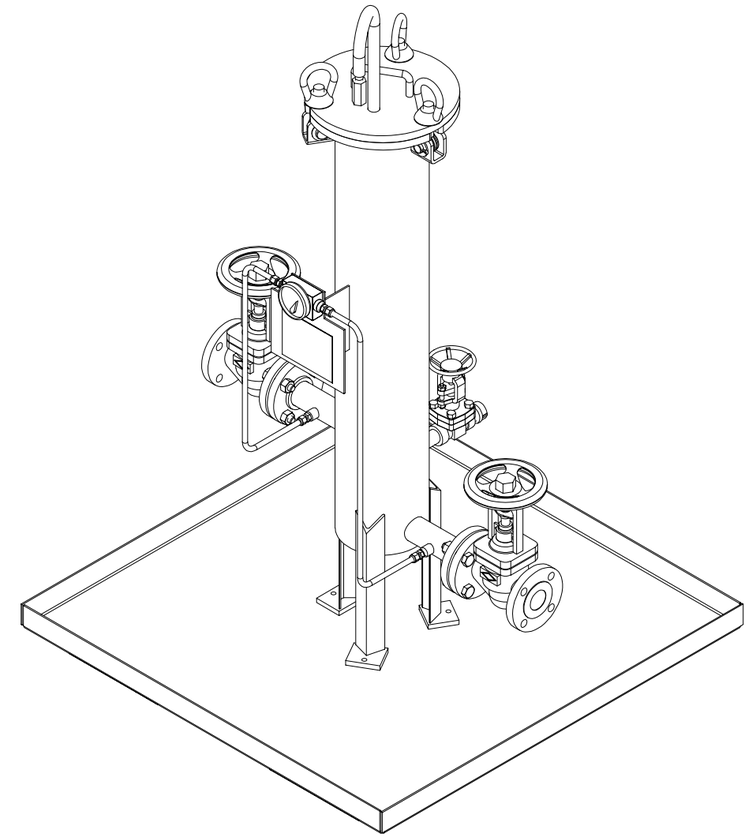

ISOMETRIC VIEW
SCALE NTS

REV	DESCRIPTION	DATE
1	ITEM C SIZE WAS 1/2" - NPT	6/27/18

TFS THERMAL FLUID SYSTEMS, INC.

TFS
THREE FILTER LAYOUT

DWG BY: IPG	FILE NAME: C:\WS\Design\STANDARD PARTS\3D PARTS (INVENTOR)\WESSELS\FILTERS\DWG\STD-3.0-L2 REV1.dwg		
DATE: 1/29/2018	CUST. NO: STD	DWG NO: STD-3.0-L2	REV 1
SCALE: NOTED	PROJ. NO: STD		